Flow sensors SFAB

Key features

At a glance

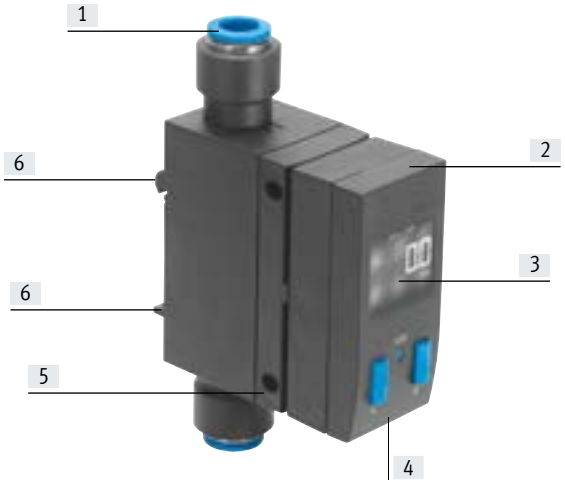

[1] Quick and secure installation thanks to QS fitting
[2] Display can be rotated 270°
[3] – High-contrast LCD display with blue background and white 9-segment display
– Bar chart depicts current measured value
– Switching point-dependent colour change
[4] Central electrical connection via an M12 plug
[5] Panel mounting of the sensor using retaining screws
5 measuring ranges from 0.1 ... 10 l/min to 10 ... 100 l/min
[6] Manifold mounting of the sensor with H-rail or individually with adapter plate for wall mounting

Impressive, straightforward, reliable

The flow sensors, featuring an attractive display and control concept, are very impressive when it comes to:
- Leakage detection in production
- Leak testing of end products
- Flow monitoring in parts feeding

The sensor provides:
- Absolute flow rate information
  – with threshold values and
  – convenient switching point adjustment via a display
- Cumulative air consumption measurement
- Patented – adjustable consumption-based switching pulse for cumulative air consumption measurement via the switching output

Easy to operate

- A large, illuminated LCD display increases the operational safety and makes the currently displayed flow rate or consumption values easy to read.
- Measured values outside the measuring range are visualised: flow rates are shown flashing.
- Values that fall below or exceed the threshold values can also be identified from a distance or if the sensor is in an inaccessible location by the display changing colour.
- Simple checking of the current sensor settings in SHOW mode
- Simple switching between consumption and flow rate indication

Flexible installation

This is made possible by the extremely compact design that dispenses with an upstream laminar flow inlet and outlet – the SFAB has an integrated flow steadying channel.

Systematically more reliable

The sensor can provide precise information even when flow conditions are fluctuating and unreliable thanks to the very large measuring range.

Convenient

- Clear and fast menu navigation
- Integrated QS fittings
- Fast teach-in
- Rotatable display
- Secure connections with extremely short assembly times
- Manual consumption measurement with start/stop and reset functionality

Advantages

For the designer

- Owing to the high dynamic response of the measurement and large measuring range, a rough estimate of the system air consumption is sufficient to configure the sensor
- Festo plug and work solution
- The same device can be used for different applications
- The sensor covers a large measuring range with a specified accuracy thanks to its high dynamic response of 1:100
- NPN/PNP can be switched via the software
- Minimal assembly times
- Alternatively with 4 ... 20 mA or 0 ... 10 V analogue output
- Flexible installation without restrictions caused by laminar flow inlets, any mounting position
- Large choice of pneumatic connections is provided by the modular system
- Construction of more powerful machines

For the machine operator

- Precise information is available even with fluctuating pressure conditions
- Flow values can be read easily and reliably
- Visualisation of deviations (colour change, flashing value)
- Easy operation, no need for training
- Greater system reliability
- Values shown on the display:
  – can be shown for flow and consumption for different standard conditions
  – can be filtered/averaged independently of the analogue output in the case of high dynamic response of the measurement
- Fast commissioning thanks to easy-to-use, intuitive teach-in function

Peripherals overview

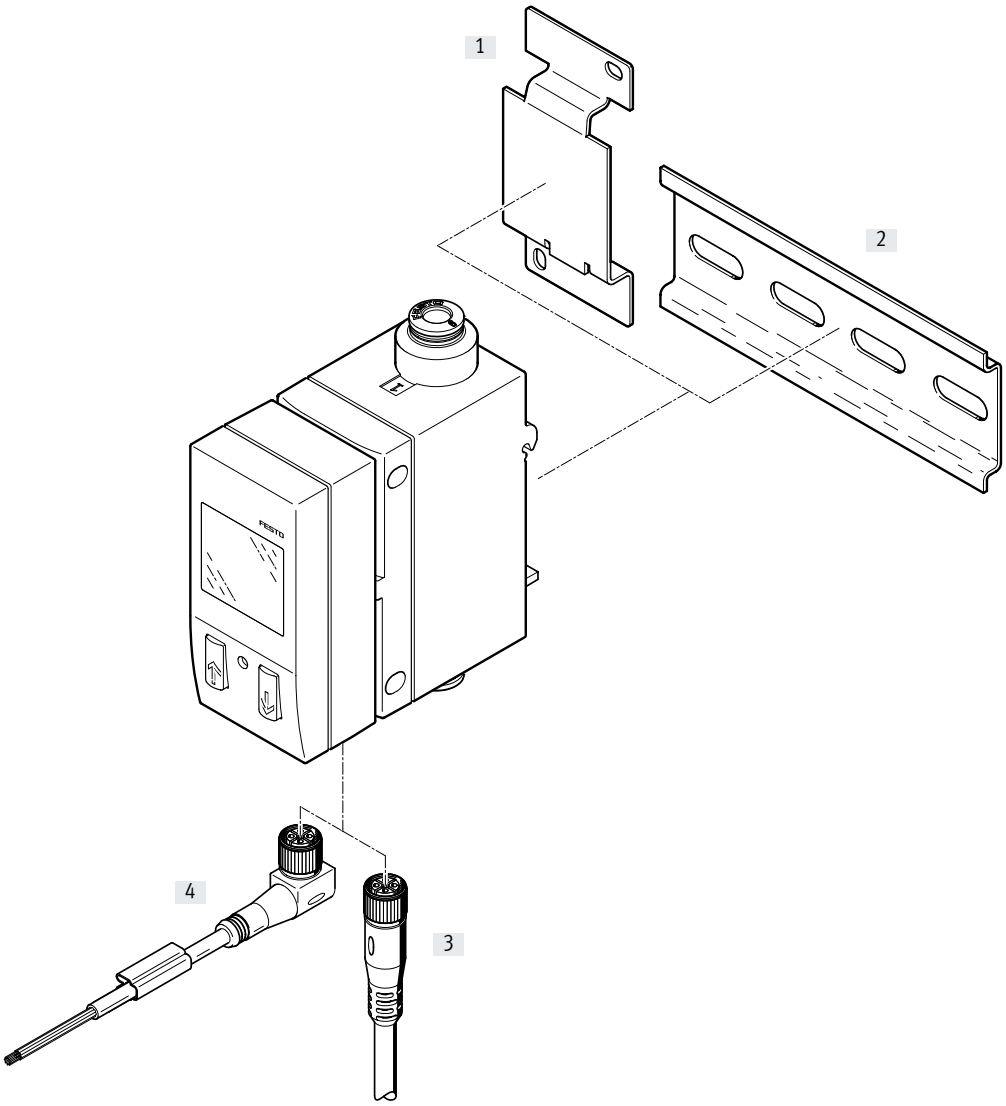

Accessories		Brief description	→ Page/Internet
[1]	Adapter plate SDE1-...-W-...	Included in the scope of delivery with SFAB-...-W...	11
[2]	Mounting rail	To DIN EN 60715	nrh
[3]	Connecting cable NEBU-M12G5	Straight socket	11
[4]	Connecting cable NEBU-M12W5	Angled socket	11

Type codes

001	Series	
SFAB	Flow sensor	

002	Flow measuring range	
10	Max. 10 l/min	
50	Max. 50 l/min	
200	Max. 200 l/min	
600	Max. 600 l/min	
1000	Max. 1000 l/min	

003	Flow rate input	
U	Unidirectional	

004	Type of mounting	
H	H-rail mounting	
W	Wall mounting	

005	Pneumatic connection	
Q6	Push-in connector 6 mm	
Q8	Push-in connector 8 mm	
Q10	Push-in connector 10 mm	
Q12	Push-in connector 12 mm	
T14	Push-in connector 1/4”	
T38	Push-in connector 3/8”	
T516	Push-in connector 5/16”	

006	Electrical output 1	
2SA	2x PNP or NPN, 1 analogue output 4 ... 20 mA	
2SV	2x PNP or NPN, 1 analogue output 0 ... 10 V	

007	Electrical connection	
M12	Plug M12, A-coded	

008	Connecting cable, M8, straight socket	
	None	
2.5S	2.5 m	
5S	5 m	

009	Connecting cable, M8, angled plug socket	
	None	
2.5A	2.5 m	
5A	5 m	

010	EU certification	
	None	
EX2	II 3GD	

Additional variants can be ordered using the modular product system → 10

- Pneumatic connection
- Electrical accessories
- EU certification (ATEX)

Data sheet

Function

Current output 2SA

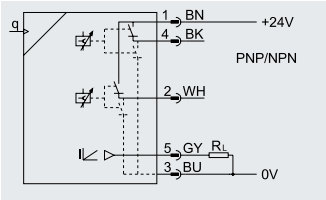

Voltage output 2SV

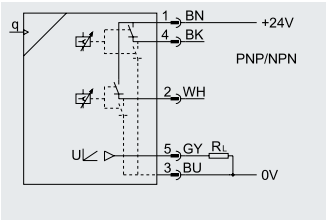

- Analogue output 0 ... 10 V, adjustable switching outputs 2x PNP or 2x NPN
- Analogue output 4 ... 20 mA, adjustable switching outputs 2x PNP or 2x NPN
- Freely selectable pulse output for consumption measurement
- Analogue filter for setting the rise time
- Digital filter for smoothing the display values

General technical data						
		-10U	-50U	-200U	-600U	-1000U
General						
Certification		RCM compliance mark				
		c UL us - Recognized (OL)				
KC mark		KC EMC				
Certificate issuing authority		UL E322346				
CE marking (see declaration of conformity)		To EU EMC Directive				
		To EU Explosion Protection Directive (ATEX)				
		To EU RoHS Directive				
Note on materials		RoHS-compliant				
Input signal/measuring element						
Measured variable		Flow rate, consumption				
Flow direction		Unidirectional P1 } P2				
Measuring principle		Thermal				
Flow measuring range	[l/min]	0.1 ... 10	0.5 ... 50	2 ... 200	6 ... 600	10 ... 1000
Operating pressure	[bar]	0 ... 10				
Nominal pressure	[bar]	6				
Operating medium		Compressed air to ISO 8573-1:2010 [6:4:4]		Compressed air to ISO 8573-1:2010 [7:4:4]		
		Nitrogen		Nitrogen		
Temperature of medium	[°C]	0 ... 50				
Ambient temperature	[°C]	0 ... 50				
Nominal temperature	[°C]	23				

Data sheet

Electrical data		-10U	-50U	-200U	-600U	-1000U
Output, general[1), 2)]						
Accuracy of flow rate		+/- (3% o.m.v. + 0.3% FS)				
Repetition accuracy, zero point ±FS	[%]	0.2				
Repetition accuracy range ±FS	[%]	0.8				
Temperature coefficient range ±FS/K	[%]	≤0.1				
Pressure-dependent margin ±FS/bar	[%]	0.5				
Switching output						
Switching output		2x PNP or 2x NPN, adjustable				
Switching function		Window comparator or threshold value comparator, adjustable				
Switching element function		N/C or N/O contact, adjustable				
Switch-on time		Adjustable (factory setting: approx. 80 ms)				
Switch-off time		Adjustable (factory setting: approx. 80 ms)				
Max. output current	[mA]	≤100				
Voltage drop	[V]	Max. 1.5				
Inductive protective circuit		Adapted to MZ, MY, ME coils				
Analogue output						
Characteristic flow rate curve	[l/min]	0 ... 10	0 ... 50	0 ... 200	0 ... 600	0 ... 1000
Output characteristic curve for current	[mA]	4 ... 20				
Output characteristic curve for voltage	[V]	0 ... 10				
Rise time	[ms]	15, 30, 60 (factory setting), 125, 250, 500, 999 possible settings				
Max. load resistance at current output	[ohm]	500				
Min. load resistance of voltage output	[kOhm]	10				
Output, additional data						
Short circuit current rating		Yes				
Overload protection		Provided				
Electronics						
Operating voltage range DC	[v]	15 ... 30				
Reverse polarity protection		For all electrical connections				
Electromechanics						
Electrical connection		Straight plug, M12x1, 5-pin				
Max. connecting cable length	[m]	<10				

1) Accuracy with nominal conditions (6 bar, 23°C and horizontal mounting position)
2) % FS = % of the final value in the measuring range (full scale)

Pin allocation

Plug M12x1, 5-pin	Pin	Meaning
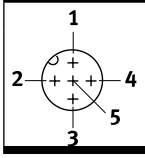	1	Operating voltage +24 V DC
	2	Binary output B
	3	0 V
	4	Binary output A
	5	Analogue output C

Data sheet

Mechanics						
		-10U	-50U	-200U	-600U	-1000U
Mounting position		Any				
Pneumatic connection[1)]		QS6	QS6	–	–	–
		QS8	QS8	QS8		
		QS10	QS10	QS10	QS10	QS10
		QS12	QS12	QS12	QS12	QS12
		QS1/4	QS1/4	–	–	–
		QS5/16	QS5/16	QS5/16	–	–
		QS3/8	QS3/8	QS3/8	QS3/8	QS3/8
Product weight	[g]	160				
Information about housing materials		Reinforced PA				

Display/operation						
		-10U	-50U	-200U	-600U	-1000U
Display type		Illuminated LCD, blue				
Displayable units		l/min, l/h, scfm, l, m^3, scf			l/min, scfm, l, m^3, scf	
Setting range for flow rate threshold value		1%FS ... 100% FS				
Setting range for consumption impulse threshold value	[l]	0.1 ... 1999.9	0.2 ... 1999.9	1 ... 1999.9	2 ... 1999.9	3 ... 1999.9
	[m^3]	0.01 ... 199.99			0.1 ... 1999.9	1 ... 19999
	[scf]	0.01 ... 199.99		0.03 ... 199.99	0.1 ... 1999.9	
Hysteresis setting range		0%FS ... 90% FS				

Immissions/emissions						
		-10U	-50U	-200U	-600U	-1000U
Storage temperature	[°C]	–20 ... +80 (characteristic -D: –10 ... +60)				
Degree of protection		IP65				
Pressure drop	[mbar]	<100				
Protection class		III				

Data sheet

Dimensions Download CAD data ➔ www.festo.com

SFAB-...-H/-W

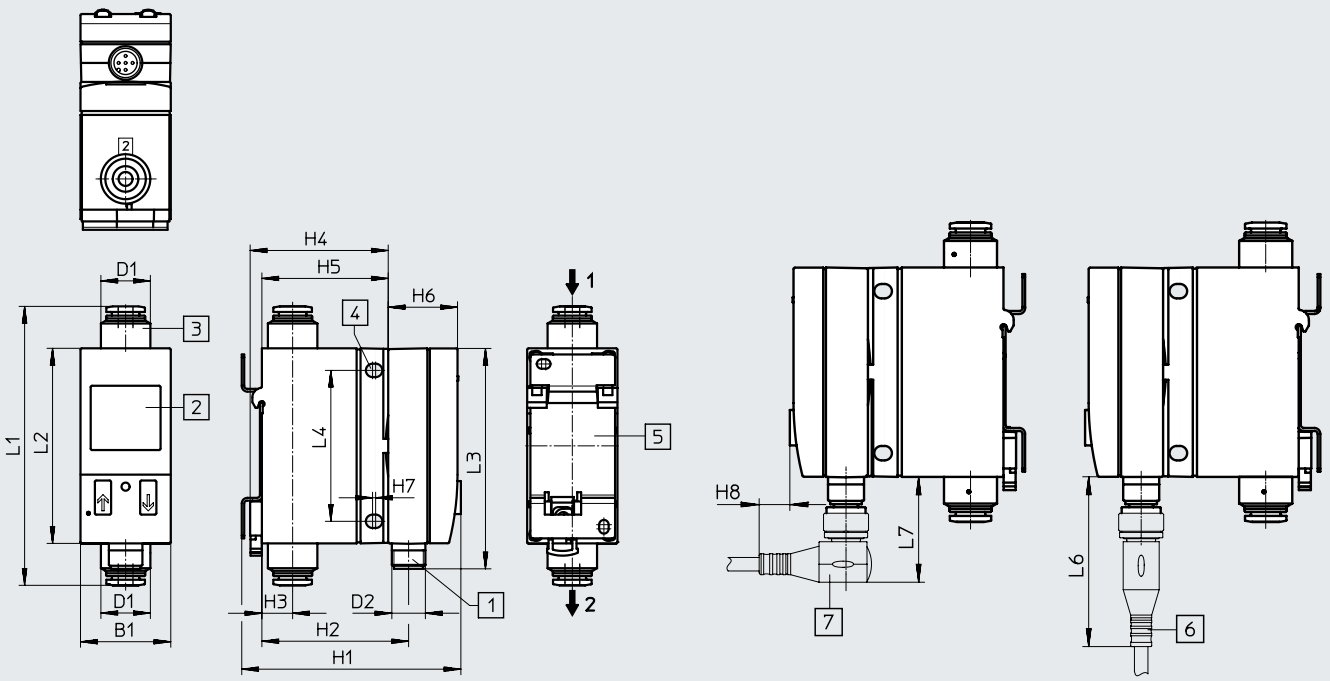

[1] Plug M12x1 to EN 60947-5-2
[2] LCD display
[3] Pneumatic connection
[4] Hole for retaining screw M4
[5] Adapter plate for wall mounting
[6] Connecting cable, straight socket
[7] Connecting cable, angled plug socket

Type	B1	D1	D2	H1	H2	H3	H4	H5	H6	H7	H8	L1	L2	L3	L4	L6	L7
SFAB-...-HQ6	32.3	17.7	M12x1	–	51.6	11	48.5	44.3	24.4	1.1	12	95.6	69.8	78.9	54	56	35
SFAB-...-HQ8												99.8					
SFAB-...-HQ10		22										119.8					
SFAB-...-HQ12												124.4					
SFAB-...-WQ6	32.3	17.7	M12x1	79	51.6	11	48.5	44.3	24.4	1.1	12	95.6	69.8	78.9	54	56	35
SFAB-...-WQ8												99.8					
SFAB-...-WQ10		22										119.8					

Data sheet

Ordering data Design	Electrical output	Flow measuring range [l/min]	Part no.	Type
H-rail mounting				
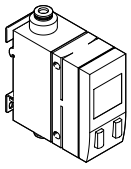	2x PNP or NPN, 1 analogue output 4 ... 20 mA	0.1 ... 10	**565385**	**SFAB-10U-HQ6-2SA-M12**
		0.5 ... 50	**565389**	**SFAB-50U-HQ6-2SA-M12**
		2 ... 200	**565393**	**SFAB-200U-HQ8-2SA-M12**
		2 ... 200	**565397**	**SFAB-200U-HQ10-2SA-M12**
		6 ... 600	**565401**	**SFAB-600U-HQ10-2SA-M12**
		10 ... 1000	**565405**	**SFAB-1000U-HQ10-2SA-M12**
	2x PNP or NPN, 1 analogue output 0 ... 10 V	0.1 ... 10	**565386**	**SFAB-10U-HQ6-2SV-M12**
		0.5 ... 50	**565390**	**SFAB-50U-HQ6-2SV-M12**
		2 ... 200	**565394**	**SFAB-200U-HQ8-2SV-M12**
		2 ... 200	**565398**	**SFAB-200U-HQ10-2SV-M12**
		6 ... 600	**565402**	**SFAB-600U-HQ10-2SV-M12**
		10 ... 1000	**565406**	**SFAB-1000U-HQ10-2SV-M12**
Wall or surface mounting				
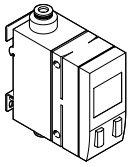	2x PNP or NPN, 1 analogue output 4 ... 20 mA	0.1 ... 10	**565387**	**SFAB-10U-WQ6-2SA-M12**
		0.5 ... 50	**565391**	**SFAB-50U-WQ6-2SA-M12**
		2 ... 200	**565395**	**SFAB-200U-WQ8-2SA-M12**
		2 ... 200	**565399**	**SFAB-200U-WQ10-2SA-M12**
		6 ... 600	**565403**	**SFAB-600U-WQ10-2SA-M12**
		10 ... 1000	**565407**	**SFAB-1000U-WQ10-2SA-M12**
	2x PNP or NPN, 1 analogue output 0 ... 10 V	0.1 ... 10	**565388**	**SFAB-10U-WQ6-2SV-M12**
		0.5 ... 50	**565392**	**SFAB-50U-WQ6-2SV-M12**
		2 ... 200	**565396**	**SFAB-200U-WQ8-2SV-M12**
		2 ... 200	**565400**	**SFAB-200U-WQ10-2SV-M12**
		6 ... 600	**565404**	**SFAB-600U-WQ10-2SV-M12**
		10 ... 1000	**565408**	**SFAB-1000U-WQ10-2SV-M12**

Ordering data – Modular product system

Ordering table		Conditions	Code		Enter code
Module no.	**563795**				
Function	Flow sensor		**SFAB**		-SFAB
Medium	Compressed air		–		
Flow measuring range l/min	Max. 10		**10**		
	Max. 50		**50**		
	Max. 200		**200**		
	Max. 600		**600**		
	Max. 1000		**1000**		
Flow input	Unidirectional		**U**		U
Type of mounting	H-rail mounting		**-H**		
	Wall mounting		**-W**		
Pneumatic connection	Push-in connector 6 mm	[1]	**Q6**		
	Push-in connector 8 mm	[2]	**Q8**		
	Push-in connector 10 mm		**Q10**		
	Push-in connector 12 mm		**Q12**		
	Push-in connector for 1/4	[1]	**T14**		
	Push-in connector for 5/16	[2]	**T516**		
	Push-in connector for 3/8		**T38**		
Electrical output	2x PNP or NPN, 1 analogue output 4 ... 20 mA		**-2SA**		
	2x PNP or NPN, 1 analogue output 0 ... 10 V		**-2SV**		
Electrical connection	M12 plug, A-coded		**-M12**		M12
Electrical accessories	n/a				
	Angled socket, cable 2.5 m		**-2.5A**		
	Straight socket, cable 2.5 m		**-2.5S**		
	Angled socket, cable 5 m		**-5 A**		
	Straight socket, cable 5 m		**-5S**		
EU certification	n/a				
	II 3GD		**-EX2**		

[1] Q6, T14 Not with flow measuring range 200, 600, 1000
[2] Q8, T516 Not with flow measuring range 600, 1000

Accessories

Adapter plate SDE1- ...-W ...
For wall or surface mounting

Material:
Steel

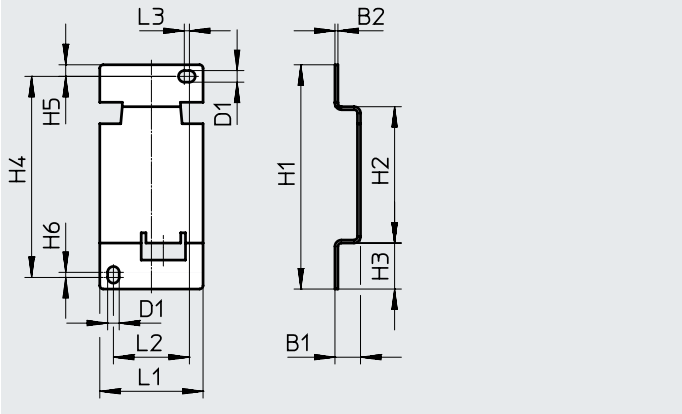

Ordering data – Adapter plate[1)]

Type	B1 −0.4	B2	D1 ⌀	H1 ±0.1	H2	H3	H4	H5	H6	L1	L2	L3	Part no.	Type
SDE-1-...-W...	7.5	0.9	3.4	65.8	40	13.5	59	3.4	1.5	30.3	22.3	1.5	**194297**	**SDE1-...-W...**

1) Included in the scope of delivery with SFAB-...-W...

Ordering data – One-way flow control valve

Data sheets ➔ Internet: grx-vfoi

	Pneumatic connection	Suitable for SFAB[1)]	Part no.	Type
	QS-4	SFAB-10U	**193967**	**GR-QS-4**
	QS-6	SFAB-50U	**193969**	**GR-QS-6**
	QS-8	SFAB-200U	**193970**	**GR-QS-8**

1) Additional accessories may be required for adaptation to the pneumatic connection.

Ordering data – Connecting cables

Data sheets ➔ Internet: nebu

	Number of wires	Cable length [m]	Part no.	Type
M12x1, straight socket				
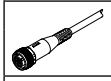	5	2.5	**541330**	**NEBU-M12G5-K-2.5-LE5**
		5	**541331**	**NEBU-M12G5-K-5-LE5**
M12x1, angled socket				
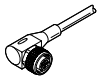	5	2.5	**567843**	**NEBU-M12W5-K-2.5-LE5**
		5	**567844**	**NEBU-M12W5-K-5-LE5**